Scope

This specification applies to built-in DC stabilized power supply, OZP-120-12/15-***-* and OZP-120-24-***-*.
The unit (OZP-120-24-*B*-* model only) provides DC output with special battery package connected even when supply mains fails. Also, output voltage, 12V or 15V, of OZP-120-12/15-***-* shall be able to be switched between by setting shorting plug. In addition, all items in this specification shall be provided at normal temperature and humidity with battery package disconnected unless otherwise specified.

Model name coding

Example: OZ P－120－12/15－J 0 0－C
① ② ③ ④ ⑤ ⑥ ⑦ ⑧

① Series name …… 「OZ」: OZ series
② Peak power …… 「P」: Corresponding to Peak power
③ Continuous output power …… 「120」: 120W
④ Output voltage …… 「12/15」: 12V/15V Changeover system, 「24」: 24V
⑤ Input/Output connector type …… 「J」: Nylon connector, 「T」: Harmonica terminal block, 「E」: European terminal block
⑥ Backup function …… 「0」: W/O backup function, 「B」: With backup function
⑦ Modification …… 「0」: Standard, 「1～9」 or 「A～Z」: Modification symbol
⑧ Chassis …… 「C」: With Chassis, 「K」: With Chassis and Cover, 「Blank」: W/O Chassis and Cover

General specification

Items			Specification			Measurement conditions, etc.
			OZP-120-12/15		OZP-120-24	
AC Input	Rated voltage		AC100～240V			Worldwide range
	Voltage range		AC 85 to 264V			Load factor shall be 90 to 100% at AC85 to 95V range.
	Current	at AC 100V	1.5A typical at 120W /1.9A typical at 150W (forced air cooling)			Figures in ( ) show output power.
		at AC 200V	0.8A typical at 120W /1.0A typical at 150W (forced air cooling)			
	Rated frequency		50 / 60 Hz			Frequency range: 47 to 63Hz
	Inrush current	at AC 100V	17A typ			Power thermistor system Continuous rated output power with cold start at 25℃
		at AC 200V	34A typ			
	Efficiency	at AC 100V	81% typ at 12V setting	83% typ at 15V setting	83% typ	with continuous rated output
		at AC 200V	84% typ at 12V setting	85% typ at 15V setting	85% typ	
	Power factor	at AC 100V	99% typ			with continuous rated output
		at AC 200V	90% typ			

Note:

出図
㈱ニプロン・技管

Drawn by		Checked		Approved by		Model	Drawing No.
	石橋				上本	OZP-120-12/15-***-* OZP-120-24-***-*	2881-01-4-520 1／11

Items			Specification OZP-120-12/15	Specification OZP-120-24	Measurement conditions, etc.
Environment	Operating temp.	Natural air cooling	-10 to 60℃ (Open frame single body)		Refer to "Output derating specification."
			-10 to 55℃ (with Chassis and Cover)		
		Forced air cooling	-10 to 70℃ (Open frame single body)		Refer to "Output derating specification." *1
			-10 to 70℃ (with Chassis and Cover)		
	Operating humidity		20 to 90%RH		
	Storage temp. /Humidity		-20～75℃／10～95%RH		There shall be no condensation.
	Vibration		To endure the vibration acceleration of 2G with vibration frequency of 10 to 55Hz for 10 sweep cycles in each X-Y-Z direction.		To follow JIS-C-60068-2-6 at no operation
	Surface dropping		Lift one bottom edge of the unit 50mm high with the opposite edge placed on the test bench, and let it fall. Repeat 3 times for each of four bottom edges, and no malfunction shall be observed		To follow JIS-C-60068-2-31 at no operation
Insulation	Dielectric strength		(1)AC 3kV for one minute between Input and Output/RC/AC_FAIL/BATT_LOW (2)AC 2kV for one minute between Input and FG		Cut-off current: 10mA Cut-off current: 10mA
			(3) DC 500V for one minute in between Output/RC/AC_FAIL/BATT_LOW/FG		
	Insulation resistance		50MΩ min. in between Input/Output/RC/AC_FAIL/BATT_LOW/FG		with DC500V Megger
	Leakage current		0.25mA max. at AC 100V/0.5mA max. at AC 200V		
Others	Electrostatic discharge		IEC61000-4-2 test level 3 compliant (Contact discharge: ±6kV, 10 times)		To apply to FG, Chassis or Cover. There shall be no malfunction
	Line noise immunity		±2000V (pulse width of 100/1000nS, cycle period of 30 to 100Hz, Normal/Common mode with Positive/Negative polarity for 10 minutes)		To be measured with INS-410. There shall be no output voltage fluctuation in DC component nor malfunction
	Impulse voltage immunity		IEC-61000-4-5 (Installation environment Class 3) compliant; apply five times each of Common mode ±2kV and Normal mode ±1kV		There shall be no malfunction.
	Conducted emission		VCCI, FCC, CISPR22, and EN55022 Class B compliant		at Rated Input and 120W output *2
	Harmonic current regulations		IEC61000-3-2 (Ed. 2.1) Class D, and EN61000-3-2 (A14) Class D compliant		at Rated Input and continuous rated output
	Safety Standard		UL60950-1, CSA60950-1 (c-UL), EN60950-1, and EN50178 acquired CE marking (Low voltage Directive), DENAN (Ordinance item 2) compliant		
	Cooling system		Natural air cooling		
	Dimensions and Weight		73×35×180 (W×H×D) ／400g typical		except Chassis and Cover
			83.8×45×210 (W×H×D) ／650g typical		with Chassis and Cover
	Warranty		Three years after delivery: if any defects belong to us, the defective unit shall be repaired or replaced at our cost.		The unit shall be operated at normal temperature and humidity.

Note:

*1: Output derating at startup at the ambient temperature of 0℃ or lower is required. The derating rate is 80% at AC 85V, 86.7% at AC 90V and 100% at AC 100V or higher.

*2: Recommended cable: "WH-C05VH-800-01" with a ferrite core equipped

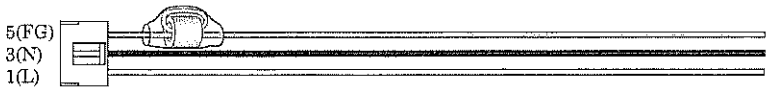

Drawn by	Checked	Approved by	Model	Drawing No.
石橋		深	OZP-120-12/15-***-* OZP-120-24-***-*	2881-01-4-520 2／11

Output Specification (The output characteristics at backup operation by a special battery package shall follow the specification of battery package).

Items			Specification OZP-120-12/15	Specification OZP-120-24	Measurement conditions, etc.
Output Rating	Rated Voltage		12V/15V	24V	Refer to Note below for 12V/15V voltage selection.
	Continuous rating (natural air cooling)	Current	10A/8A	5A	at rated input Refer to "Output derating specification."
		Power	120W	120W	
	Continuous rating (forced air cooling)	Current	12.5A/10A	6.3A	
		Power	150W	151.2W	
	Peak rating (10 seconds or less)	Current	15A/12A	9A	Refer to "Peak output specification." Natural cooling and forced cooling.
		Power	180W	216W	
Output Characteristics	Factory setting		12V±2%/15V±3%	24V±2%	at rated output of 120W
	Adjustable voltage range		12V±10% /15V - 5%,+10%	24V +20%/-5%	
	Static input regulation		48mV max.	94mV max.	
	Static load regulation		100mV max.	150mV max.	
	Temperature regulation		0.02%/℃ max.		
	Ripple voltage	0 to +65℃	120mVp-p max.		Connect 150mm max. lead wire to output connectors, and then connect a 10uF electrolytic capacitor with a 0.1uF ceramic capacitor in parallel to the other ends of the wires to measure by an oscilloscope with 100MHz frequency band.
		-10 to 0℃	160mVp-p max.		
	Spike noise voltage	0 to +65℃	150mVp-p max.		
		-10 to 0℃	180mVp-p max.		
Protection circuit	Overcurrent protection	OCP point	101% min. of peak rated current		
		Method	Hold-down current limiting → Blocking oscillation		
		Recovery	Automatic recovery		
	Overvoltage protection	OVP point	13.8 to 16.2V /17.3 to 20.3V	30 to 35V	
		Method	Output shutdown		
		Recovery	Reclosing of AC input		

Note:
12V/15V voltage selection
For OZP-120-12/15-***-*, remove a **shorting plug (CN9)**, and output voltage goes up to 15V typical (factory setting: ±3%). Also over voltage protection point (OVP point) changes to the range of 17.3 up to 20.3V at the same time. Output voltage at factory setting is 12V. Make sure to shut down the output before setting to 15V.

出図
㈱ニプロン・技管

Drawn by	Checked	Approved by	Model	Drawing No.
石橋		山本	OZP-120-12/15-***-* OZP-120-24-***-*	2881-01-4-520

Signal Input/Output specification

	Items	Specification OZP-120-12/15	Specification OZP-120-24	Signal Input/Output circuit diagram
Input signal	Output ON/OFF control signal (RC signal)			

Operation mode

between +RC and -RC	Output
SW ON (4.5V min.)	ON
SW OFF (0.8V max.)	OFF

※With special battery package connected to "OZP-120-24-*B*-*," output also shuts down when SW OFF becomes in effect during backup operation due to AC failure provided that shorting plug CN5 is unplugged.

External power supply and Load-limiting resistor

External power supply : E	Load-limiting resistor: R
4.5 to 12.5Vdc	Not required
12.5 to 30Vdc	1.5kΩ

Shorting Plug

With **shorting plug (CN2)** connected, Output starts up when AC input is applied regardless of RC signal. To control Start/Stop of output by RC signal, uncap shorting plug of CN2.

Note: Shorting plug (CN2) and radiating fin next to it are primary circuit components. Make sure to operate the plug after the AC input is turned off.

In the case that the shorting plug is connected, and special battery package is connected to 「OZP-120-24-*B*-*」 for backup operation, backup operation continues after power failure regardless of RC signal. To stop power failure backup operation by RC signal, uncap the shorting plug of CN5.

※Circuit diagram except "OZP-120-24-*B*-*"

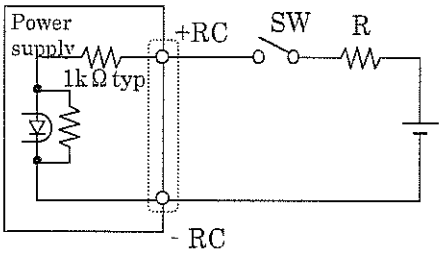

※"OZP-120-24-*B*-*" circuit diagram

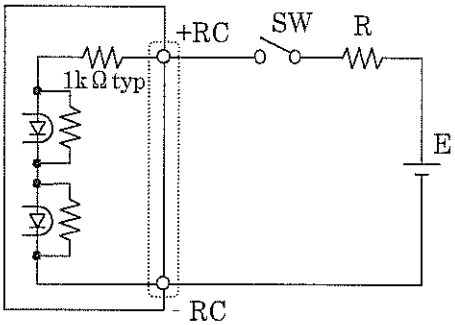

Note

出図
㈱ニプロン・技管

Drawn by	石橋	Checked		Approved by		Model	Drawing No.
						OZP-120-12/15-***-* OZP-120-24-***-*	2881-01-4-520 4／11

	Items	Specification OZP-120-12/15 / OZP-120-24	Signal Input/Output circuit diagram
Output signal	Blackout detection signal (AC_FAIL)	To go "OPEN" when AC input goes down and power failure is detected. Detection voltage: AC 80V typical Detection delay time: 20 to 50ms after blackout.	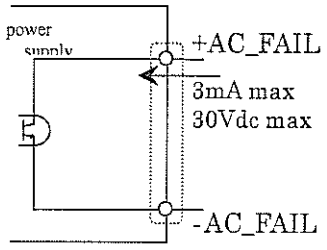
	Battery voltage low signal (BATT_LOW) * Only for "OZP-120-24-*B*-*"	To be output through insulated photo-coupler upon receipt of battery voltage-low notice signal from the battery package. This signal goes "OPEN" when the battery package is not connected. Details shall depend on individual battery package specification to be connected.	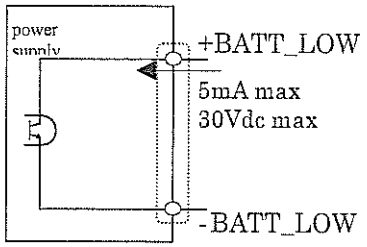

● Sequence timing diagram

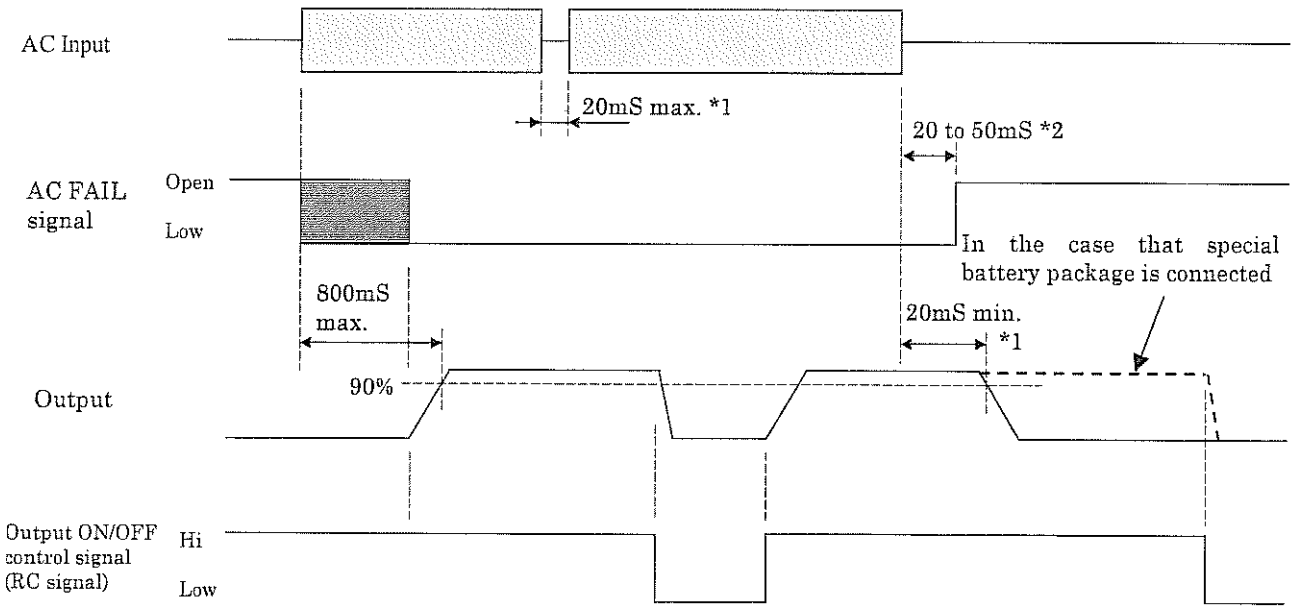

*1: at rated input and rated 120W load. However, output shall be 90W for OZP-120-12/15 when output voltage is set to 15V.
*2: When output power is 10% or less of rated power, the period shall be 70ms or less provided that input voltage is AC 150V or higher.

出図
㈱ニプロン・技管

Note

Drawn by	Checked	Approved by	Model	Drawing No.
石橋		森	OZP-120-12/15-***-* OZP-120-24-***-*	2881-01-4-520

● Peak output current specification

Peak output current shall meet the specification below.

- Duty ratio of peak current shall be 35% or less. (30% max. for OZP-120-24.)
- Energized period of peak current shall be 10 seconds or less.
- In the case that the ambient temperature is 50℃ or higher with natural air cooling, the energized period of peak current shall be 5 seconds or less.
- The value resulting from the formula below shall not exceed the continuous rated current, Io, after derating specified in "Output derating " item.

$$\sqrt{((Ip^2 \times D)+(Im^2 \times (1-D)))} \leqq Io$$

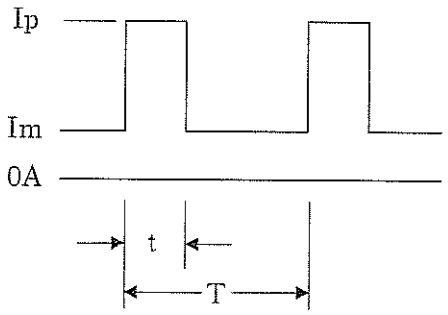

Ip=Peak current value
Im=Min. current value
D=Duty ratio, t/T
t=Pulse width of peak current
T=Cycle
Io=Continuous rated current specified in "Output derating" item.

Note

出図
㈱ニプロン・技管

Drawn by	Checked	Approved by	Model	Drawing No.
			0ZP-120-12/15-***-* 0ZP-120-24-***-*	2881-01-4-520

● Output derating based on ambient temperature, installation direction and cooling condition

Follow the derating diagram below for output according to the ambient temperature and installation direction.
In addition, for the unit with chassis and cover, input voltage shall be 90V or higher and the direction shown in figure (F) shall not be applied. Also, forced air cooling condition in the diagram shall be provided that the air blow of 1.5m/s is applied from any direction other than solder side of PWB.

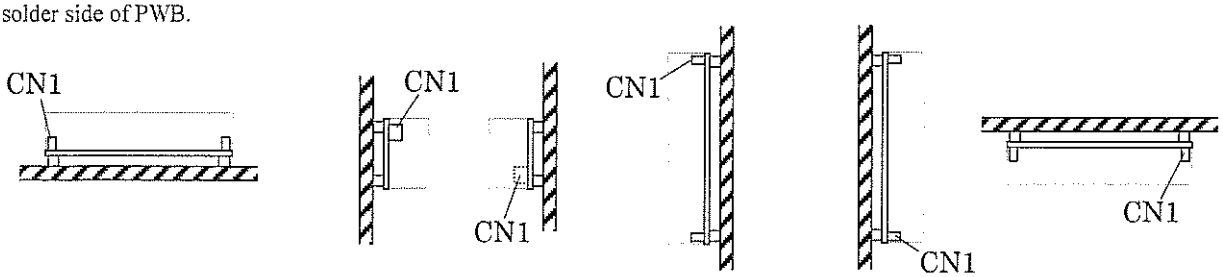

(A) (B) (C) (D) (E) (F)

	Output derating (Both for OZP-120-12/15 and OZP-120-24)
For Open frame single body	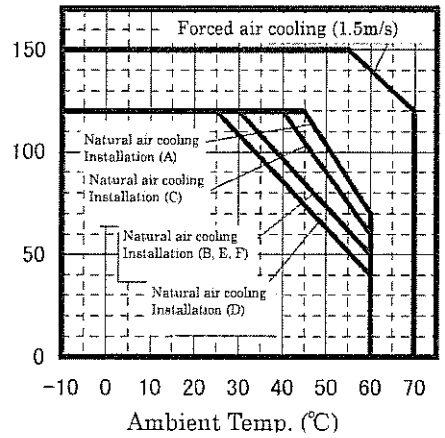
With Chassis and Cover	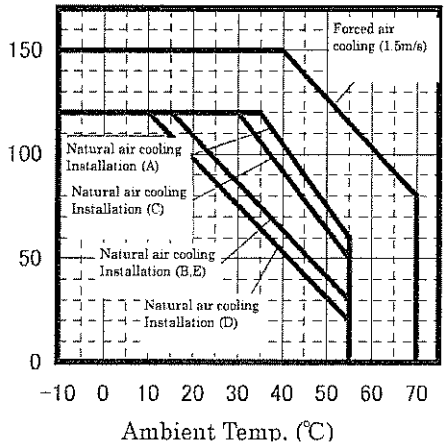

出図
㈱ニプロン・技管

Drawn by	Checked	Approved by	Model	Drawing No.
			OZP-120-12/15-***-* OZP-120-24-***-*	2881-01-4-520

Guideline for forced air cooling

Set the core surface temperature of the transformer (T1) to 80℃ or lower.

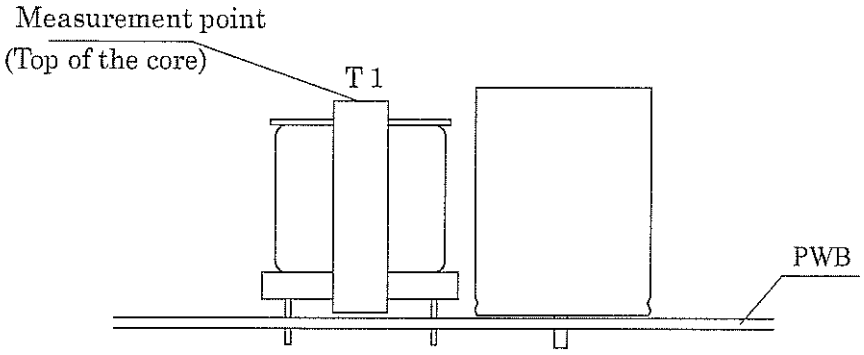

● Output derating vs. Input voltage

When input voltage is AC95V or lower, follow the derating diagram below to reduce the continuous rated current and power.

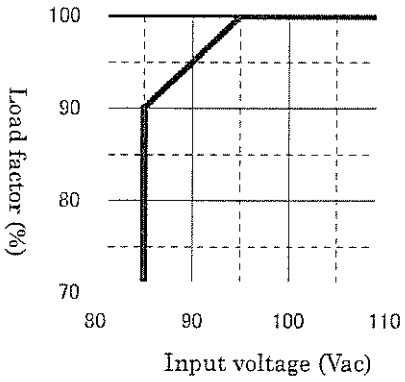

Note

出図
㈱ニプロン・技管

Drawn by	石橋	Checked		Approved by	上本	Model 0ZP-120-12/15-***-* 0ZP-120-24-***-*	Drawing No. 2881-01-4-520 8／11

Circuit block diagram

(⬚ is applied to OZP-120-24-*B*-* model only)

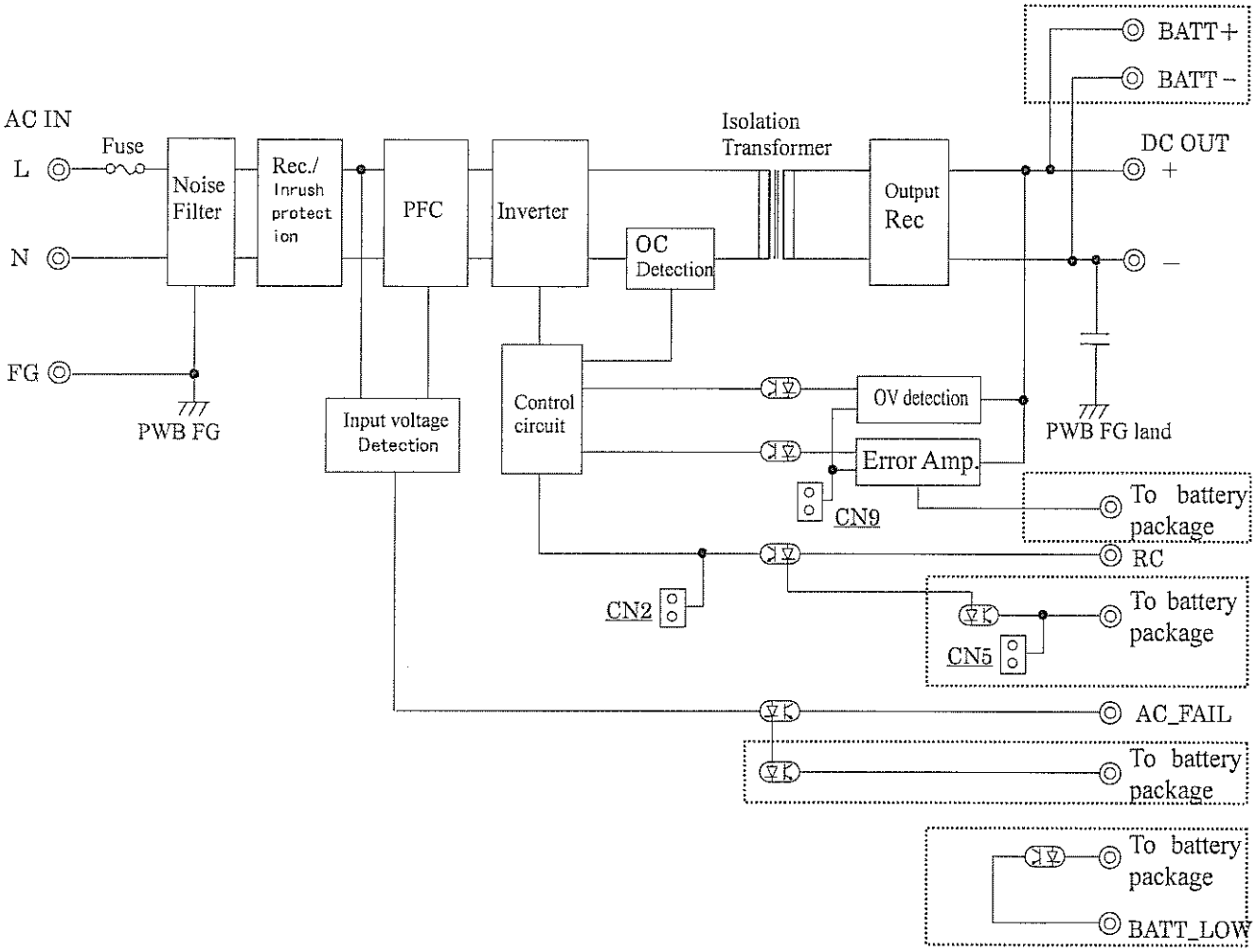

Note

出図
㈱ニプロン・技管

Drawn by	石橋	Checked		Approved by		Model OZP-120-12/15-***-* OZP-120-24-***-*	Drawing No. 2881-01-4-520 9／11

Power supply installation

- To meet the safety standard for Insulation and dielectric withstand, install the power supply to keep the dimensions, d1, d2, and d3, shown in the drawings below.
- Install the power supply so that natural air convection and air ventilation is expected to keep the temperature rise around the power supply low.

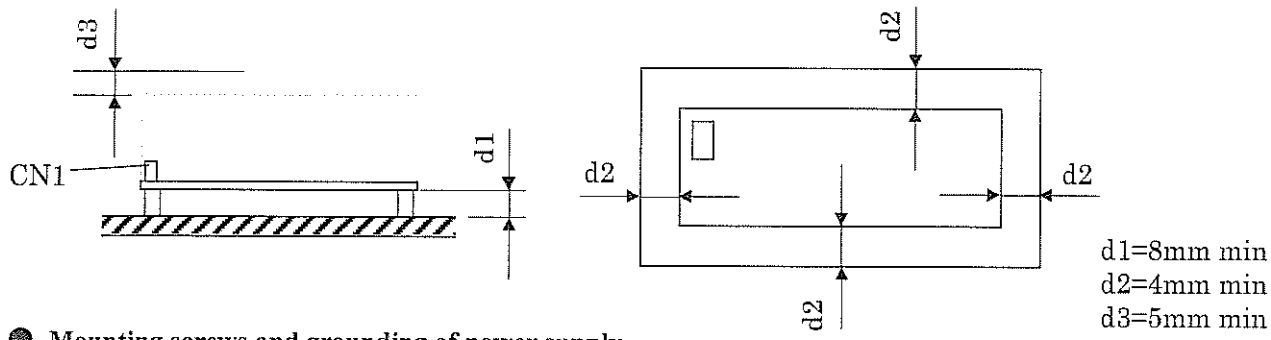

Mounting screws and grounding of power supply

- Fix all four screws firmly at power supply mounting holes.
- Use 3mm diameter screws for mounting power supply.
- In mounting, do not use any metal parts that exceed the hatched area shown below.
- In mounting the unit with Chassis and Cover, do not use any screws that exceed the area shown below.
- Make sure to connect FG terminal of CN1 or FG portion of PWB to customer's safety grounding. Also, make sure to connect FG terminal of CN1 to the safety ground of the customer's system in the case of safety standard application.
- Be recommended to connect the FG portion of solder face of PWB to customer's system body with metal parts such as metal spacers to reduce noise.

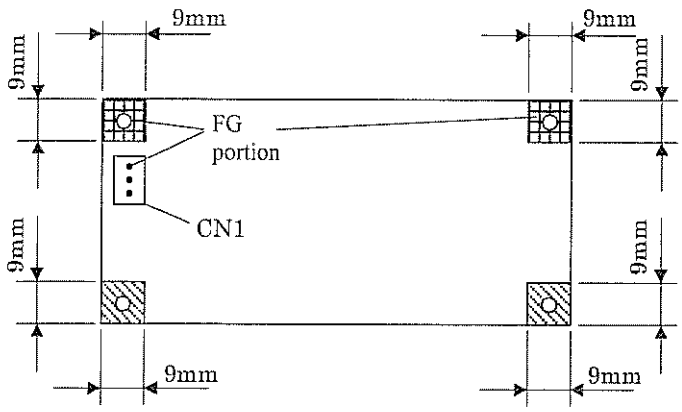

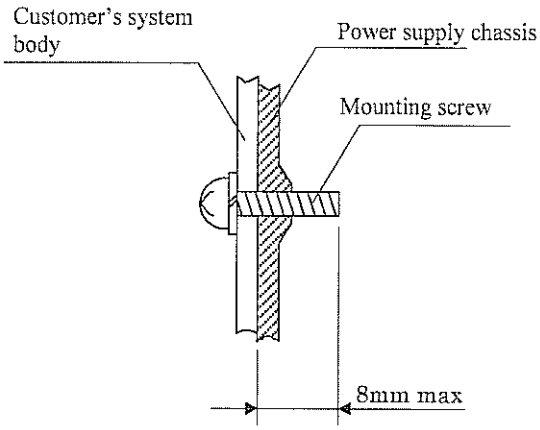

Note

出図
㈱ニプロン・技管

Drawn by	Checked	Approved by	Model	Drawing No.
石橋		平	0ZP-120-12/15-***-* 0ZP-120-24-***-*	2881-01-4-520 10/11

Precautions before use

1. Grounding - ⚠Warning
This unit is designed and produced to meet Class 1 equipment. Make sure to connect the grounding terminal of the unit to grounding in a proper way for safety.

2. Electric shock - ⚠Warning
This unit is designed and produced as built-in equipment and has high-voltage part inside. Make sure to securely install in the equipment in a proper way to prevent electric shock. Also, shorting plug (CN2) for RC signal setting and radiating fin next to it are primary circuit components. When the plug is handled, make sure to turn off AC input before the handling of the plug.

3. PWB handling - ⚠Caution
In handling, use the edge of the PWB so as not to touch the component sides. Lift the PWB from the equipment with filter pieces in installation. Besides, handle the PWB with care to prevent twisting or bending of the PC board as it has SMT components on it.

4. Output short circuit - ⚠ Caution
Prevent shorting outputs. When output is shorted, capacitors inside the power supply rapidly discharge leading to fire and/or spark resulting in serious accident. It also shortens the lifetime of the power supply.

5. Inrush current control circuit - ⚠Caution
To prevent inrush current into rectifying capacitors when AC input is turned on, a power thermistor is used. When AC input is turned on before the temperature of the thermistor goes low after turning off, huge inrush current may occur. Make sure to keep 60-second period at least before reclosing of AC input.

6. Output energy - ⚠ Caution
The output energy of this unit is 240VA or more, and regarded as dangerous. Any operators must not touch the unit. Besides, apply necessary measures to prevent service personnel or service tools to touch accidentally the equipment with this unit installed. Make sure that the output voltage of this unit goes down to the safe level before servicing after the input voltage is turned off.

出図
㈱ニプロン・技管

Drawn by	石橋	Checked		Approved by	深	Model 0ZP-120-12/15-***-* 0ZP-120-24-***-*	Drawing No. 2881-01-4-520 11／11

Nipron

(注意) 電源の取り付け部にてｾﾙｽﾍﾟｰｻ等を使用する場合は、外径がφ6.0以上ものをご使用下さい。

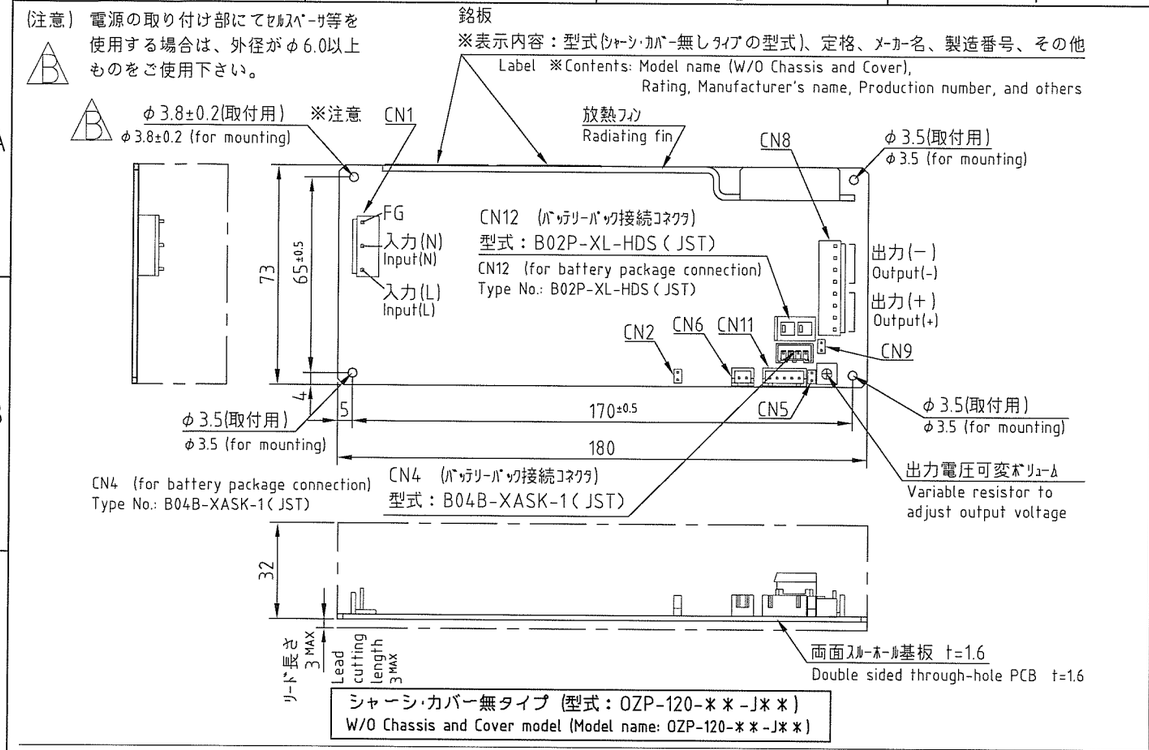

シャーシ･カバー無タイプ (型式：OZP-120-＊＊-J＊＊)
W/O Chassis and Cover model (Model name: OZP-120-＊＊-J＊＊)

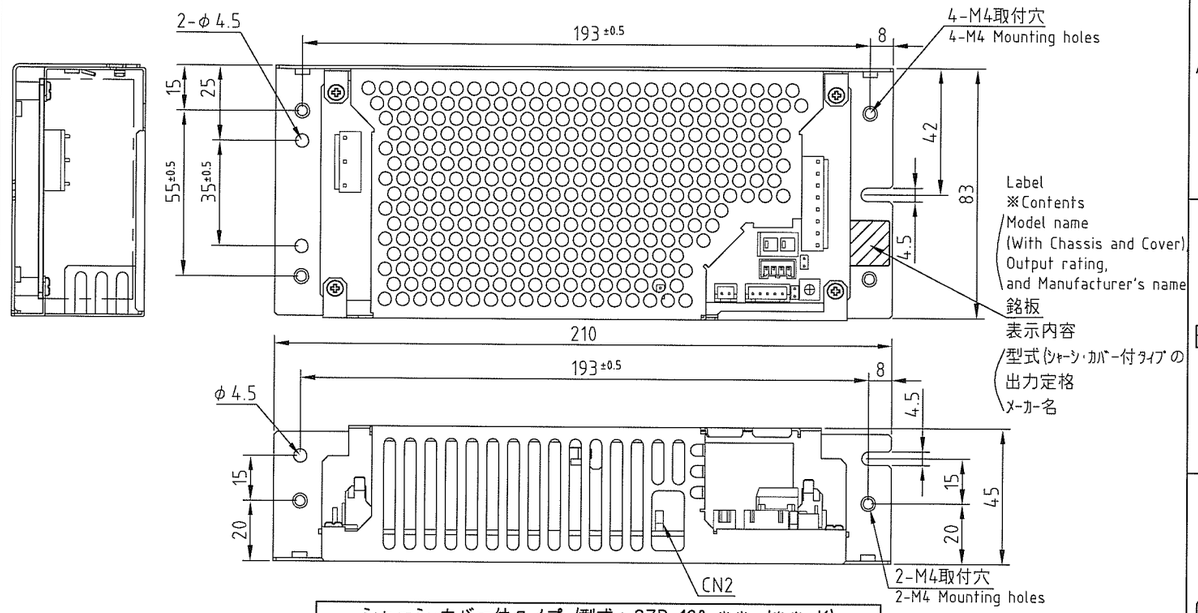

シャーシ･カバー付タイプ (型式：OZP-120-＊＊-J＊＊-K)
Model name with Chassis and Cover (Model name: OZP-120-＊＊-J＊＊-K)

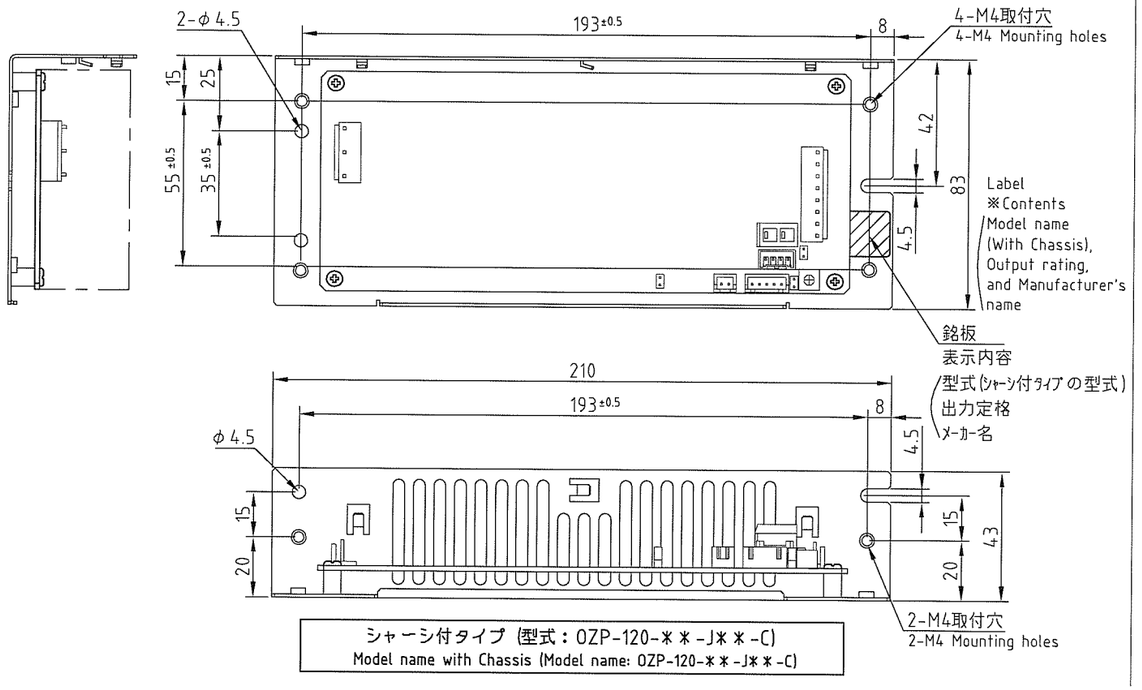

シャーシ付タイプ (型式：OZP-120-＊＊-J＊＊-C)
Model name with Chassis (Model name: OZP-120-＊＊-J＊＊-C)

※コネクタピンアサイン ※Connector pinout assignment

CN1 (Input)		
PIN No.	FUNCTION	CONNECTOR TYPE
1	AC(L)	B3P5-VH(JST)
2		
3	AC(N)	
4		
5	FG	

※CN1 適合ハウジング:
VHR-5N(JST)
適合ターミナル:
ﾘｰﾙ: SVH-21T-P1.1(JST)
ﾊﾞﾙｸ: BVH-21T-P1.1(JST)
※CN1 Applicable housing:
VHR-5N(JST)
Applicable terminals:
Reel: SVH-21T-P1.1(JST)
Bulk: BVH-21T-P1.1(JST)

CN8 (Output)		
PIN No.	FUNCTION	CONNECTOR TYPE
1~4	−DC	B8P-VH(JST)
5~8	+DC	

※CN8 適合ハウジング:
VHR-8N(JST)
適合ターミナル:
ﾘｰﾙ: SVH-21T-P1.1(JST)
ﾊﾞﾙｸ: BVH-21T-P1.1(JST)
※CN8 Applicable housing:
VHR-8N(JST)
Applicable terminals:
Reel: SVH-21T-P1.1(JST)
Bulk: BVH-21T-P1.1(JST)

CN6 (ON/OFF control)		
PIN No.	FUNCTION	CONNECTOR TYPE
1	+RC	B2B-XH(JST)
2	−RC	

※CN6 適合ハウジング:
XHP-2(JST)
適合ターミナル:
ﾘｰﾙ: SXH-001T-P0.6(JST)
ﾊﾞﾙｸ: BXH-001T-P0.6(JST)
※CN6 Applicable housing:
XHP-2(JST)
Applicable terminals:
Reel: SXH-001T-P0.6(JST)
Bulk: BXH-001T-P0.6(JST)

CN11 (Output signal)		
PIN No.	FUNCTION	CONNECTOR TYPE
1	+BATT_LOW	B5B-XH(JST)
2	−BATT_LOW	
3		
4	+AC_FAIL	
5	−AC_FAIL	

※CN11 適合ハウジング:
XHP-5(JST)
適合ターミナル:
ﾘｰﾙ: SXH-001T-P0.6(JST)
ﾊﾞﾙｸ: BXH-001T-P0.6(JST)
※CN11 Applicable housing:
XHP-5(JST)
Applicable terminals:
Reel: SXH-001T-P0.6(JST)
Bulk: BXH-001T-P0.6(JST)

※各種コネクタの装備について ※Details of connectors attached

コネクタ名 Connector name	機能 Function	製品型式 Model name: OZP-120-12/15-J0＊-＊	OZP-120-12-JB＊-＊	OZP-120-24-J0＊-＊	OZP-120-24-JB＊-＊	OZP-120-30/36-J0＊-＊	OZP-120-48-J0＊-＊
CN4	バッテリーパック制御用信号 Battery package control signal	− N/A	有 Yes	− N/A	有 Yes	− N/A	− N/A
CN5	バックアップ動作モード設定 Backup operation mode setting	− N/A	− Short	− N/A	有 Yes	− N/A	− N/A
CN9	出力電圧切り換え Output voltage switching	有 Yes	− Short	− N/A	− N/A	有 Yes	− N/A
CN11	出力信号 Output signal	有 Yes	− N/A	有 Yes	有 Yes	有 Yes	有 Yes
CN12	バッテリーパック入出力 Battery package Input/Output	− N/A	有 Yes	− N/A	有 Yes	− N/A	− N/A

D版 △1 ×2 2013. 3. 5 森本 I-250305 (12-JB＊追加)　C版 △1 ×1 2011. 8. 19 石橋 I-230636(30V/36Vﾀｲﾌﾟ・48Vﾀｲﾌﾟ内容追記)

- 寸法公差：±1(但し取付寸法は±0.5)
- Dimensional tolerance: ±1 (±0.5 for mounting dimension)
- △1 シャーシの取付穴(M4)締め付けトルク：1.5N･m MAX
- Tightening torque for chassis mounting hole (M4): 1.5N･m MAX

- △1 CN4、CN5、CN9、CN11、CN12は対応品のみ付属。右記「各種コネクタの装備について」参照のこと。
- CN4, CN5, CN9, CN11 and CN12 are attached only to corresponding models. Refer to "Details of connectors attached" on the right.

DRAWN BY	CHECKED BY	CHECKED BY	APPROVED BY	SCALE	MATERIALS	TITLE	OZP-120-＊＊-J＊＊-＊
片岡	川政	山田	山本	UNITS m/m	FINISH		外観図(ﾅｲﾛﾝｺﾈｸﾀﾓﾃﾞﾙ) Outside drawing (Nylon connector model)
ISSUED 2007. 5. 25				3RD ANGLE PROJECTION		DRAWING NO.	2881-01-3-050 D

出図
(株)ニプロン･技管

Nipron Co., Ltd.

Due to the technical improvement, the specifications and functions are subject to change without notice.

西野　雅隆2015/05/28 13:16:30 JST

Nipron

(注意) 電源の取り付け部にてｾﾙｽﾍﾟｰｻ等を使用する場合は、外径がφ6.0以上のものをご使用下さい。

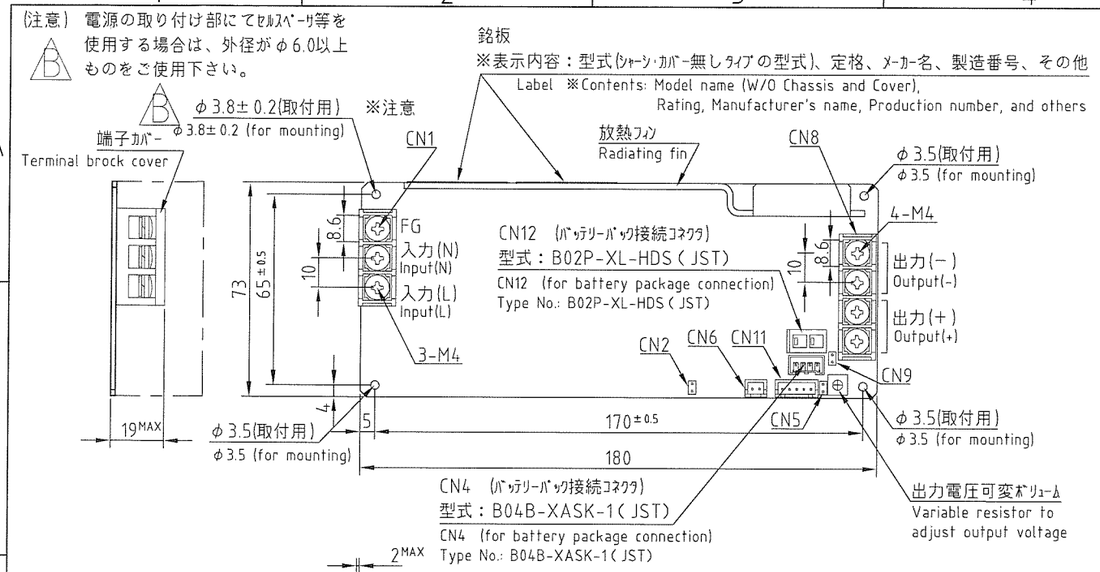

シャーシ･カバー無タイプ (型式：OZP-120-＊＊-T＊＊)
W/O Chassis and Cover model (Model name: OZP-120-＊＊-T＊＊)

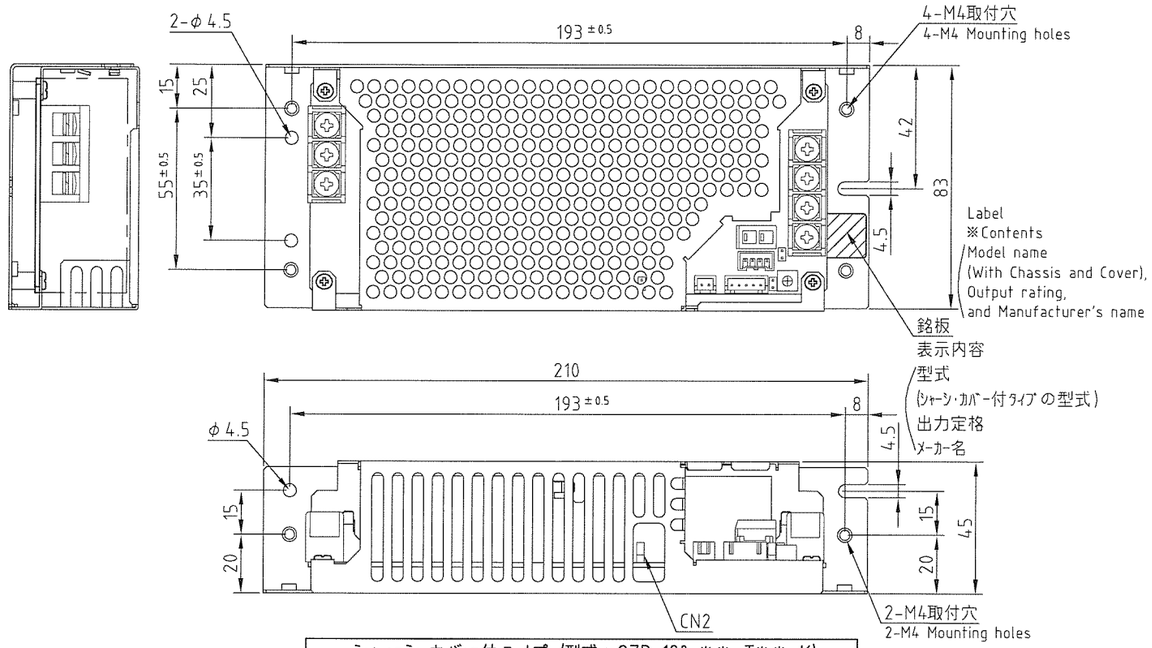

シャーシ･カバー付タイプ (型式：OZP-120-＊＊-T＊＊-K)
Model name with Chassis and Cover (Model name: OZP-120-＊＊-T＊＊-K)

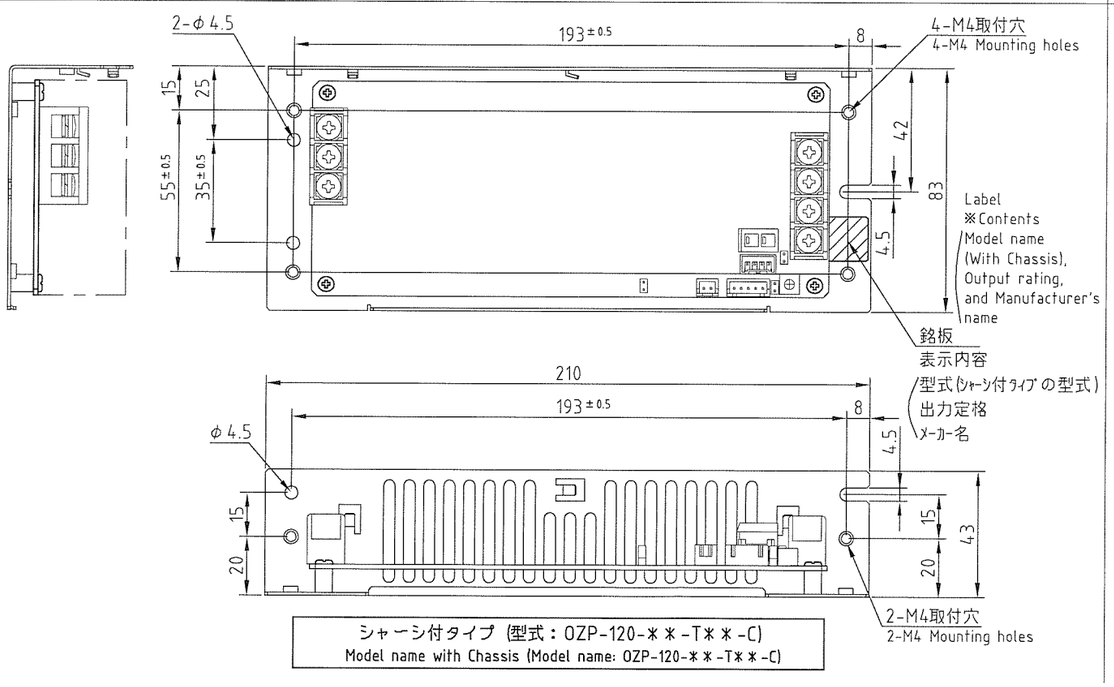

シャーシ付タイプ (型式：OZP-120-＊＊-T＊＊-C)
Model name with Chassis (Model name: OZP-120-＊＊-T＊＊-C)

※コネクタピンアサイン ※Connector pinout assignment

CN6 (ON/OFF control)

PIN No.	FUNCTION	CONNECTOR TYPE
1	+RC	B2B-XH(JST)
2	−RC	

※CN6 適合ハウジング:
XHP-2(JST)
適合ターミナル:
ﾘｰﾙ: SXH-001T-P0.6(JST)
ﾊﾞﾙｸ: BXH-001T-P0.6(JST)
※CN6 Applicable housing:
XHP-2(JST)
Applicable terminals:
Reel: SXH-001T-P0.6(JST)
Bulk: BXH-001T-P0.6(JST)

CN11 (Output signal)

PIN No.	FUNCTION	CONNECTOR TYPE
1	+BATT_LOW	B5B-XH(JST)
2	−BATT_LOW	
3		
4	+AC_FAIL	
5	−AC_FAIL	

※CN11 適合ハウジング:
XHP-5(JST)
適合ターミナル:
ﾘｰﾙ: SXH-001T-P0.6(JST)
ﾊﾞﾙｸ: BXH-001T-P0.6(JST)
※CN11 Applicable housing:
XHP-5(JST)
Applicable terminals:
Reel: SXH-001T-P0.6(JST)
Bulk: BXH-001T-P0.6(JST)

※各種コネクタの装備について ※Details of connectors attached

コネクタ名 Connector name	機能 Function	製品型式 Model name OZP-120-12/15-T0＊-＊	OZP-120-24-T0＊-＊	OZP-120-24-TB＊-＊	OZP-120-30/36-T0＊-＊	OZP-120-48-T0＊-＊
CN4	バッテリーパック制御用信号 Battery package control signal	− N/A	− N/A	有 Yes	− N/A	− N/A
CN5	バックアップ動作モード設定 Backup operation mode setting	− N/A	− N/A	有 Yes	− N/A	− N/A
CN9	出力電圧切り換え output voltage switching	有 Yes	− N/A	− N/A	有 Yes	− N/A
CN12	バッテリーパック入出力 Battery package Input/Output	− N/A	− N/A	有 Yes	− N/A	− N/A

C版 △ × 1 2011. 8. 19 石橋 I-230636(30V/36Vﾀｲﾌﾟ・48Vﾀｲﾌﾟ内容追記)

出図
(株)ニプロン･技管

- 寸法公差：±1(但し取付寸法は±0.5)
- Dimensional tolerance: ±1 (±0.5 for mounting dimension)
- △ シャーシの取付穴(M4)締め付けトルク：1.5N･m MAX
- Tightening torque for chassis mounting hole (M4): 1.5N･m MAX
- CN4、CN5、CN9、CN12は対応品のみ付属。右記「各種コネクタの装備について」参照のこと。
- CN4, CN5, CN9 and CN12 are attached only to corresponding models. Refer to "Details of connectors attached" on the right.

DRAWN BY	CHECKED BY	CHECKED BY	APPROVED BY	SCALE	MATERIALS	TITLE	OZP-120-＊＊-T＊＊-＊
片岡	原	山田	山本	UNITS m/m	FINISH		外観図(ﾊﾓﾆｶ端子台ﾓﾃﾞﾙ) Outside drawing (Harmonica terminal block model)
ISSUED 2007. 5. 25				3RD ANGLE PROJECTION		DRAWING NO.	2881-05-3-050 C

Due to the technical improvement, the specifications and functions are subject to change without notice.

Nipron Co., Ltd.

西野 雅隆2015/05/28 13:17:30 JST

Nipron

(注意) 電源の取り付け部にてｾﾙｽﾍﾟｰｻ等を使用する場合は、外径がφ6.0以上のものをご使用下さい。

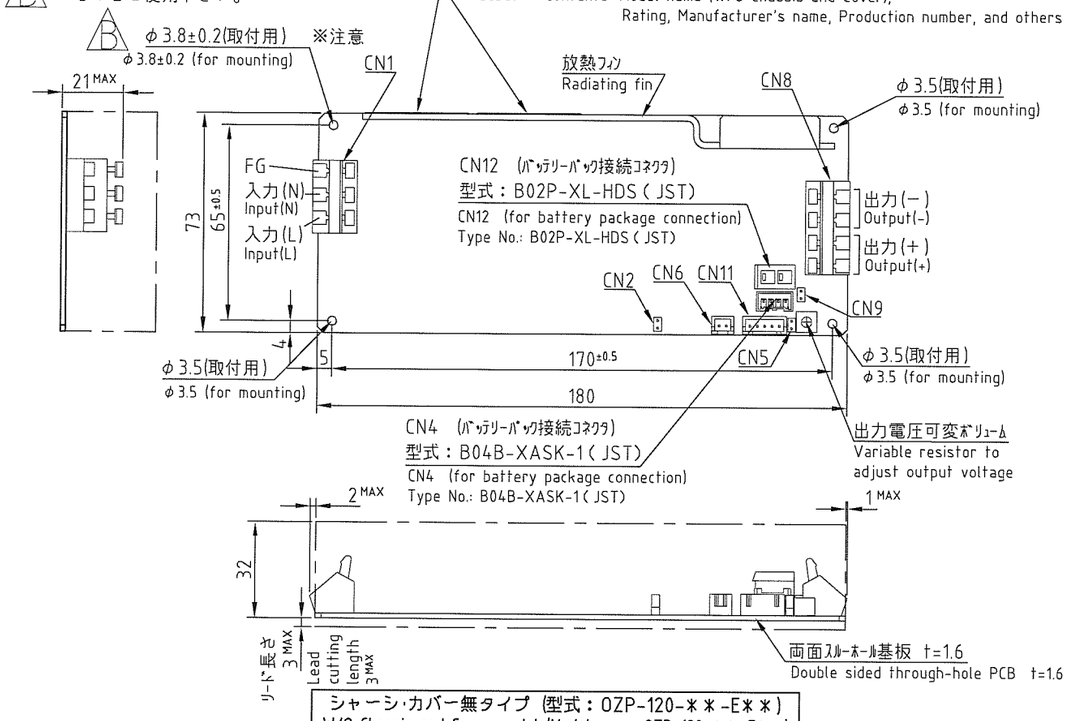

シャーシ･カバー無タイプ (型式：OZP-120-＊＊-E＊＊)
W/O Chassis and Cover model (Model name: OZP-120-＊＊-E＊＊)

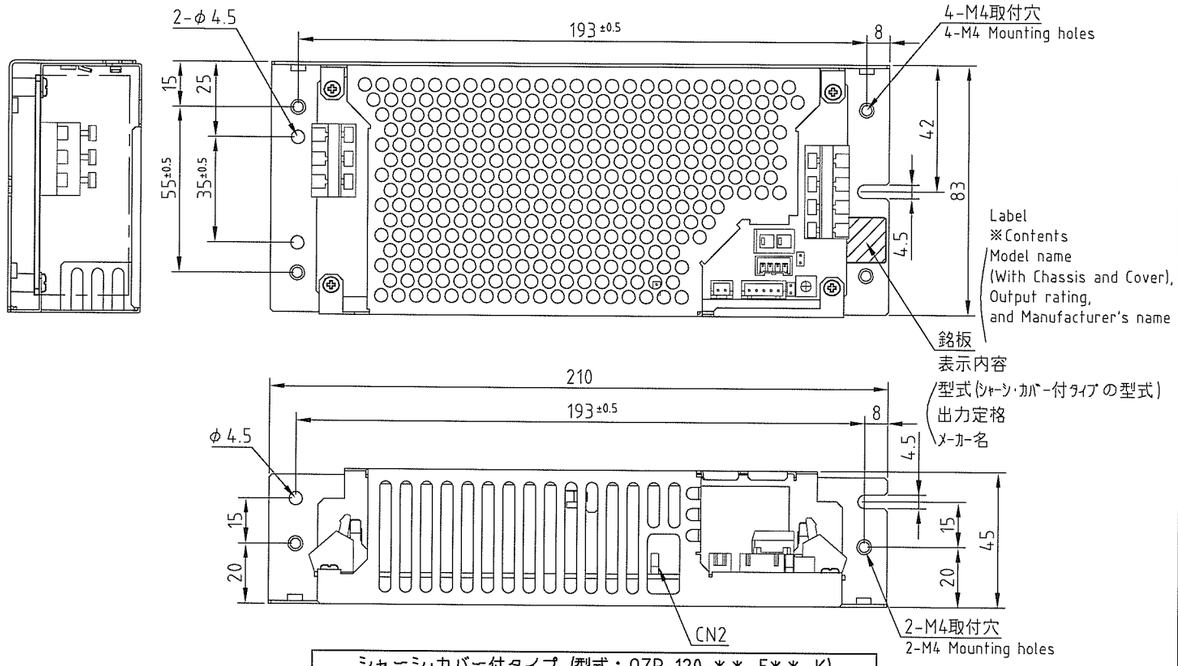

シャーシ･カバー付タイプ (型式：OZP-120-＊＊-E＊＊-K)
Model name with Chassis and Cover (Model name: OZP-120-＊＊-E＊＊-K)

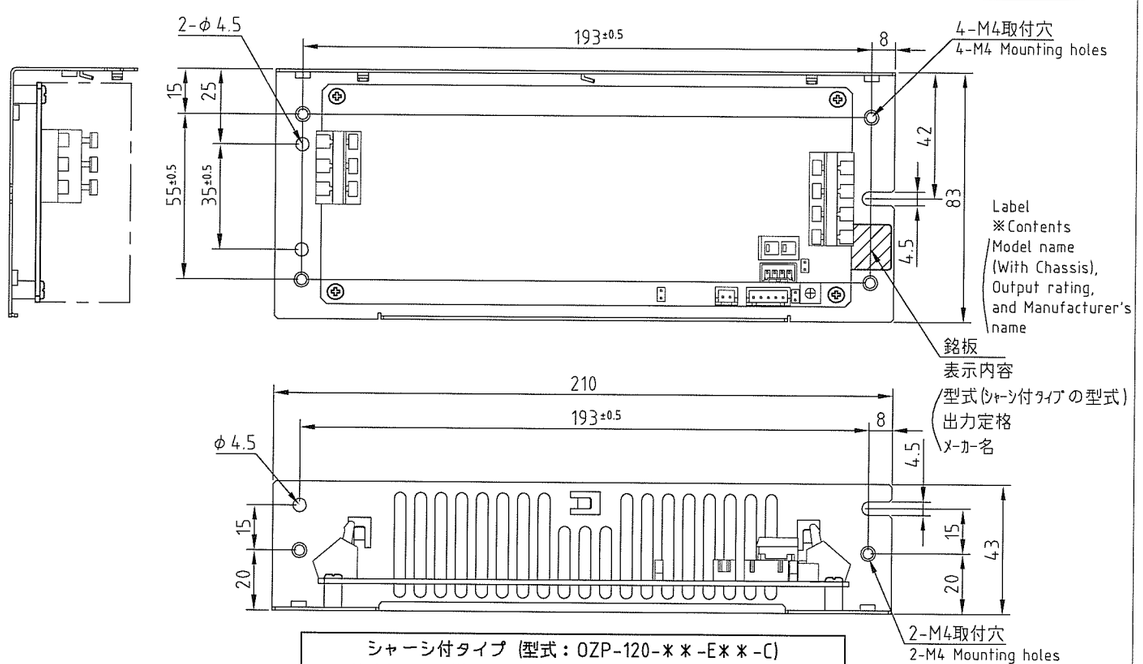

シャーシ付タイプ (型式：OZP-120-＊＊-E＊＊-C)
Model name with Chassis (Model name: OZP-120-＊＊-E＊＊-C)

※コネクタピンアサイン ※Connector pinout assignment

CN1 (Input)

PIN No.	FUNCTION	CONNECTOR TYPE
1	AC(L)	256-503(WAGO)
2	AC(N)	
3	FG	

※CN1 適合電線径：AWG#12～#20
※CN1 Applicable wires: AWG#12～#20

CN8 (Output)

PIN No.	FUNCTION	CONNECTOR TYPE
1、2	−DC	256-504(WAGO)
3、4	+DC	

※CN8 適合電線径：AWG#12～#20
※CN8 Applicable wires: AWG#12～#20

CN6 (ON/OFF control)

PIN No.	FUNCTION	CONNECTOR TYPE
1	+RC	B2B-XH(JST)
2	−RC	

※CN6 適合ハウジング：
XHP-2(JST)
適合ターミナル：
ﾘｰﾙ：SXH-001T-P0.6(JST)
ﾊﾞﾙｸ：BXH-001T-P0.6(JST)
※CN6 Applicable housing:
XHP-2(JST)
Applicable terminals:
Reel: SXH-001T-P0.6(JST)
Bulk: BXH-001T-P0.6(JST)

CN11 (Output signal)

PIN No.	FUNCTION	CONNECTOR TYPE
1	+BATT_LOW	B5B-XH(JST)
2	−BATT_LOW	
3		
4	+AC_FAIL	
5	−AC_FAIL	

※CN11 適合ハウジング：
XHP-5(JST)
適合ターミナル：
ﾘｰﾙ：SXH-001T-P0.6(JST)
ﾊﾞﾙｸ：BXH-001T-P0.6(JST)
※CN11 Applicable housing:
XHP-5(JST)
Applicable terminals:
Reel: SXH-001T-P0.6(JST)
Bulk: BXH-001T-P0.6(JST)

※各種コネクタの装備について ※Details of connectors attached

コネクタ名 Connector name	機能 Function	製品型式 Model name					
		OZP-120-12/15-E0＊-＊	OZP-120-12-EB＊-＊	OZP-120-24-E0＊-＊	OZP-120-24-EB＊-＊	OZP-120-30/36-E0＊-＊	OZP-120-48-E0＊-＊
CN4	バッテリーパック制御用信号 Battery package control signal	− N/A	有 Yes	− N/A	有 Yes	− N/A	− N/A
CN5	バックアップ動作モード設定 Backup operation mode setting	− N/A	− Short	− N/A	有 Yes	− N/A	− N/A
CN9	出力電圧切り換え Output voltage switching	有 Yes	− Short	− N/A	− N/A	有 Yes	− N/A
CN11	出力信号 Output signal	有 Yes	− N/A	有 Yes	有 Yes	有 Yes	有 Yes
CN12	バッテリーパック入出力 Battery package Input/Output	− N/A	有 Yes	− N/A	有 Yes	− N/A	− N/A

D版 △2 ×2 2013. 3. 5 森本 I-250305(12-EB＊追加)　C版 △1 ×1 2011. 8. 19 石橋 I-230636(30V/36Vﾀｲﾌﾟ・48Vﾀｲﾌﾟ内容追記)

出図
㈱ニプロン･技管

- 寸法公差：±1(但し取付寸法は±0.5)
- Dimensional tolerance: ±1 (±0.5 for mounting dimension)
- △3 シャーシの取付穴(M4)締め付けトルク：1.5N･m MAX
- Tightening torque for chassis mounting hole (M4): 1.5N･m MAX

- △4 CN4、CN5、CN9、CN11、CN12は対応品のみ付属。右記「各種コネクタの装備について」参照のこと。
- CN4, CN5, CN9, CN11 and CN12 are attached only to corresponding models. Refer to "Details of connectors attached" on the right.

DRAWN BY	CHECKED BY	CHECKED BY	APPROVED BY	SCALE	✕	MATERIALS	TITLE	OZP-120-＊＊-E＊＊-＊
片岡	川政	山田	山本	UNITS	m/m	FINISH		外観図(欧州端子台ﾓﾃﾞﾙ) Outside drawing (European terminal block model)
ISSUED 2007. 5. 25				3RD ANGLE PROJECTION			DRAWING NO.	2881-09-3-050 D

Nipron Co., Ltd.

Due to the technical improvement, the specifications and functions are subject to change without notice.

西野 雅隆2015/05/28 13:19:00 JST