Scope

This specification applies to built-in DC stabilized power supply, mUZP-120-**-J***-*.
In addition, all items in this specification shall be provided at nominal temperature and humidity unless otherwise specified.

Model Name Coding

Example : mUZP－120－12－J B 0 □－C
① ② ③ ④⑤⑥⑦ ⑧

①Series Name……"mUZP" : mUZP series
②Continuous output power……"120" : 120W (12-J0L type,12-JB0 type:100W)
③Output voltage……"12" : 12V,"24" : 24V
④Input/Output connector type……"J" : Nylon connector
⑤Optional joint connector……"0" : without connector, "B" : with connector
⑥Presence or absence of function
"L" : Without output ON/OFF control signal, Without variable resistor to adjust output voltage
"0" : With output ON/OFF control signal, With variable resistor to adjust output voltage
"H" : With output ON/OFF control signal, With variable resistor to adjust output voltage, high-efficiency type
⑦Modification……"Blank" : Standard,"1 to 9"or"A to Z"A~Z : Modification symbol
⑧Chassis……"C" : With chassis,"K" : With chassis and cover, "Blank" : Without chassis and cover

General specification

Items			Specification mUZP-120- 12 -J0L, -JB0	12 -JBH	24 -J0L, -JB0	24 -JBH	Measurements conditions, etc.
AC Input	Rated Voltage		100－240VAC				Worldwide range
	Voltage range		85－264VAC				Load factor shall be 95-100% in range of 85-90VAC input.
	Current	At 100VAC	1.16Atyp	1.35Atyp	1.35Atyp	1.32Atyp	At continuous rated output1
			1.87Atyp	1.83Atyp	1.82Atyp	1.78Atyp	At continuous rated output2
		At 200VAC	0.62Atyp	0.73Atyp	0.72Atyp	0.71Atyp	At continuous rated output1
			1.00Atyp	0.98Atyp	0.98Atyp	0.96Atyp	At continuous rated output2
	Rated Frequency		50－60 Hz				Frequency range 47－63Hz
	Inrush current	At 100VAC	17Atyp				Power thermistor system At cold start(25℃)
		At 200VAC	34Atyp				
	Efficiency	At 100VAC	87.5%typ	89.5%typ	90.0%typ	92.0%typ	At 100W load
		At 200VAC	90.0%typ	91.5%typ	92.0%typ	94.0%typ	
	Power factor	At 100VAC	99%typ				At continuous rated output1
		At 200VAC	90%typ				
	Input voltage momentary fluctuation		70VAC/500m sec				
			40VAC/100m sec				At 90W load

Note:

出図 '20.10.19 (株)ニプロン 技術管理

Drawn by	Checked by	Approved by	Model:	Drawing No.
Yodo	Yamada	Yamamoto	mUZP-120-**-J***-*	3511－01－4－520 1/11

Items			Specification 12	Specification 24	Measurements conditions, etc.
Environment	Operating Temp.	Natural air cooling	-10 to 60℃ (Open frame)		Refer to "Output derating specification"
			-10 to 55℃ (With chassis and cover)		
		Forced air cooling	-10 to 70℃ (Open frame)		Refer to "Output derating specification"
			-10 to 70℃ (With chassis and cover)		
	Operating Humidity		20 to 90%RH		
	Storage Temp./Humidity		-20 to 85℃／10 to 95%RH		There shall be no condensation
	Vibration		To endure the vibration acceleration of 2G with vibration frequency of 10 to 55Hz for 10 sweep cycles in each X,Y,Z direction		Follow JIS-C-60068-2-6 At no operation
	Mechanical Shock		Left one bottom edge of the unit 50mm high with the opposite edge placed in the test bench, and let it fall. Repeat 3 times for each of 4 bottom edges, and no malfunction shall be observed.		Follow JIS-C-60068-2-31 At no operation
Insulation	Dielectric strength		3kVAC/1 minute between input and output/RC		Cut-off current 10mA
			2kVAC/1 minute between input and FG		Cut-off current 10mA
			500VAC/1 minute between each output/RC/FG		Cut-off current 100mA
	Insulation resistance		50mΩ min. between each input/output/RC/FG		At 500VDC
	Leakage current		0.06mA typ.(At 100VAC), 0.12mA typ.(At 200VAC)		
Others	Electrostatic Discharge		IEC61000-4-2 test level 3 compliant (Contact discharge ±6kV,10 times)		Apply to FG and chassis. There shall be no malfunction, nor failure
	Line noise immunity		±2000V (pulse width of 100/1000nS, cycle period of 30 to 100Hz, Normal/Common mode with Positive/Negative polarity for 10minutes)		There shall be no fluctuation of DC output or malfunction.
	Impulse voltage immunity		IEC-61000-4-5(Installation environment 3) compliant; apply 5 times each of Common mode ±4kV and Normal mode ±2kV		There shall be no malfunction, nor failure
	Conducted emmision		VCCI,FCC,CISPR22, and EN55022 class B compliant		Rated input and continuous rated output. Measured with chassis.
	Harmonic current regulations		IEC61000-3-2(edition 2.1) class D, EN61000-3-2(A14) class D compliant		Rated input and continuous rated output.
	Safety standard		ANSI/AAMI ES60601-1		IEC60601-1(3rd,MOOP)
			UL60950-1,CSA60950-1(c-UL)		
			CE marking(IEC62368-1) ⚠⚠		,
			PSE(Ordinance item 2) compliant		
	Cooling system		Natural air cooling		
	Dimension and Weight		62mm×24mm×155mm (W×H×D) ／250g typ.		Without chassis and cover
			72mm×38.8mm×185mm (W×H×D) ／430g typ.		With chassis and cover
	Warranty		Three years after delivery: if any defects belong to us, the defective unit shall be repaired or replaced at our cost.		Except for errors caused by operation not specified in this specification.

Note:

⚠' × 1:2020.06.16 Nakagawa I-320203A
⚠ × 1:2020.02.05 Nakagawa I-320203

Drawn by	Yodo	Checked by	Yamada	Approved by	Yamamoto	Model: mUZP-120-**-J***-*	Drawing No. 3511-01-4-520A 2／11

Output specification

Items			Specification 12 -J0L,-JB0	Specification 12 -JBH	Specification 24 -J0L,-JB0	Specification 24 -JBH	Measurements conditions, etc.
Output rating	Rated Voltage		12V		24V		
	Continuous rated output 1 (Natural air cooling)	Current	8.4A	10.0A	5.0A		At rated input. Refer to "Output derating specification".
		Power	100.8W	120.0W	120.0W		
	Continuous rated output 2 (Forced air cooling)	Current	13.5A		6.75A		
		Power	162W		162W		
	Peak rated output (10s Max.)	Current	16.7A		8.4A		Refer to "Peak output specification" Natural air cooling and forced air cooling.
		Power	200.4W		201.6W		
Output characteristics	Factory Setting		-J0L: 12V±4% -JB0: 12V±2%	12V±2 %	-J0L: 24V±4% -JB0: 24V±2%	24V±2%	At continuous rated output1
	Adjustable Voltage Range		12V -5%, +10%		24V -5%, +20%		*1.
	Static Input Regulation		48mV max.		94mV max.		
	Static Load Regulation		100mV max.		150mV max.		
	Temperature Regulation		0.02%／℃ max.				
	Ripple Voltage	0 to +70℃	120mVp-p max.				Connect 150mm max. lead wire to output connectors, and then connect a 10uF electrolytic capacitor with a 0.1uFceramic capacitor in parallel to the other ends of the wires to measure by an oscilloscope with 100MHz frequency band.
		-10 to 0℃	160mVp-p max.				
	Spike Voltage	0 to +70℃	150mVp-p max.				
		-10 to 0℃	180mVp-p max.				
Protection circuit	Over Current Protection	OCP point	101% min. of peak rated current				
		Method	Blocking oscillation				
		Recovery	Automatic recovery				
	Over Voltage Protection	OVP point	13.8 to 16.2V		30.0 to 35.0V		
		Method	Output shutdown(latch lock)				
		Recovery	Reclosing of AC input				

Note:
*1. Model:mUZP-120-**-J*L-* is equipped without this function.

出図 '20.10.19 ㈱ニプロン 技術管理

Drawn by	Yodo	Checked by	Yamada	Approved by	Yamamoto	Model: mUZP-120-**-J***-*	Drawing No. 3511-01-4-520 3/11

Signal Input/Output Specification

Items		Specification mUZP-120	Signal circuit
Input signals	*2. Output ON/OFF Control signal (RC signal)		

Operating mode

Between +RC and -RC	CH1
SW ON(4.5V min.)	ON
SW OFF(0.8V max.)	OFF

External power supply and Load-limiting resistor

External power supply : E	Load-limiting resistor:R
4.5 to 12.5Vdc	Not required
12.5 to 30Vdc	1.5kΩ
30 to 48Vdc	8.2kΩ

Shorting Plug
With shorting plug(CN2) connected, Output starts up when AC input is applied regardless of RC signal.
To control start/stop of output by RC signal, uncap shorting plug of CN2.

Besides, when start/stop of output controlled by RC signal, make sure to operate RC signal after equipped switch or relay etc. in the route.

Note: Shorting Plug(CN2) is primary circuit components.
Make sure to operate the plug after the AC input is turned off.

Connecting example in the case of using external power supply

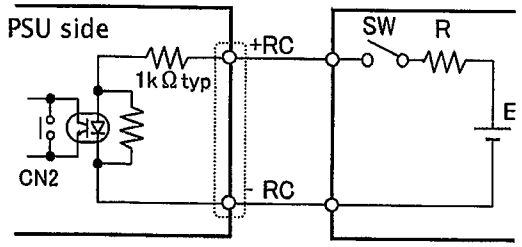

Note:
*2. mUZP-120-**-J*L-*is equipped without this function.

出図
'20.10.19
㈱ニプロン
技術管理

Drawn by	Checked by	Approved by	Model:	Drawing No.
Yodo	Yamada	Yamamoto	mUZP-120-**-J***-*	3511-01-4-520 4/11

●Sequence Timing Diagram

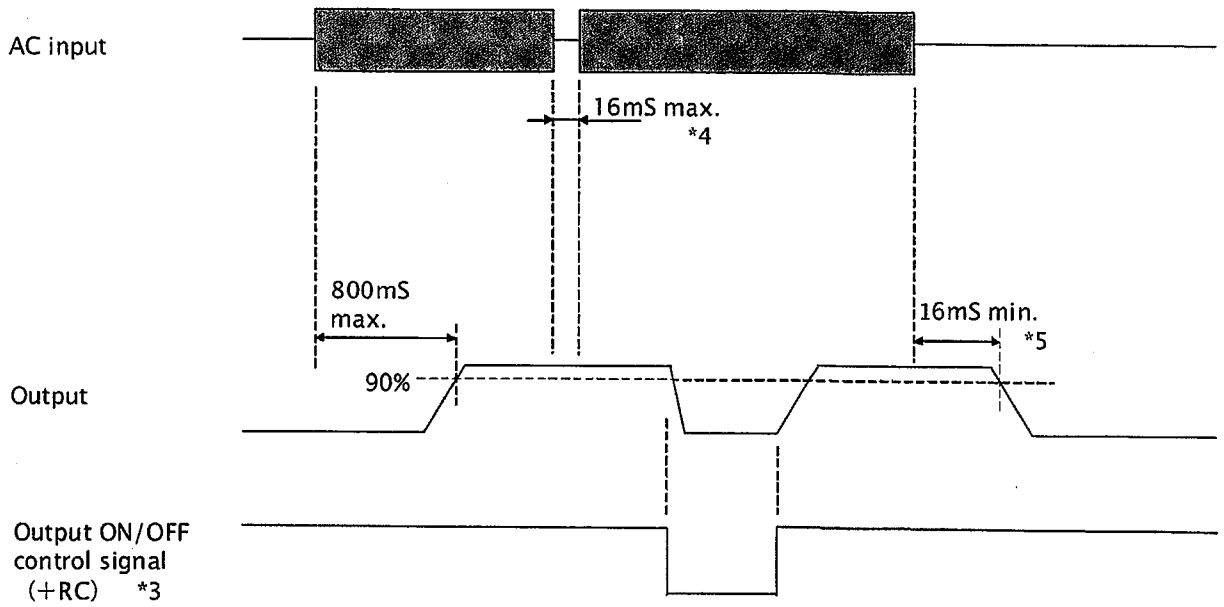

*4 At rated input, 80W output
*5 At rated input, 100W output

*3 mUZP-120-**-J*L is equipped without the function of output ON/OFF control.

Note:

出図
'20.10.19
㈱ニプロン
技術管理

Drawn by	Yodo	Checked by	Yamada	Approved by	Yamamoto	Model: mUZP-120-**-J***-*	Drawing No. 3511-01-4-520 5/11

●Peak Output Specification

Peak output current shall meet the conditions below.

- Duty ratio of peak current shall be 30% or less.
- Energized period of peak current shall be 10 seconds or less.
- In the case of the ambient temperature is 40℃ or higher with natural air cooling, the energized period of peak current shall be 5 seconds or less.
- The value resulting from the formula below shall not exceed the continuous rated current, Io, after derating specification in "Outout derating" item.

$$\sqrt{((Ip^2 \times D)+(Im^2 \times (1-D)))} \leqq Io$$

Ip=Peak current value
Im=Min. current value
D=Duty ratio, t/T
t=Pulse width of peak current
T=Cycle
Io=Conditions rated current specified in "Output derating" item

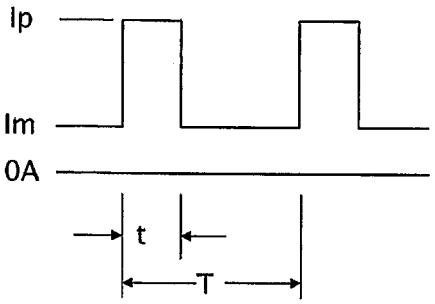

Note:

出図
'20.10.19
(株)ニプロン
技術管理

Drawn by	Checked by	Approved by	Model:	Drawing No.
Yodo	Yamada	Yamamoto	mUZP-120-**-J***-*	3511-01-4-520 6/11

●Output Derating Based on Ambient Temperature, Installation Direction and Cooling Condition

Follow the derating diagram below for output according to the ambient temperature and installation direction.
In case of using the type with chassis and cover, input voltage range shall be 90VAC or higher, and shall not use in direction(F). Also, forced air cooling condition in the diagram shall be provided that the air flow 1.5m/s is applied from the direction shown below.

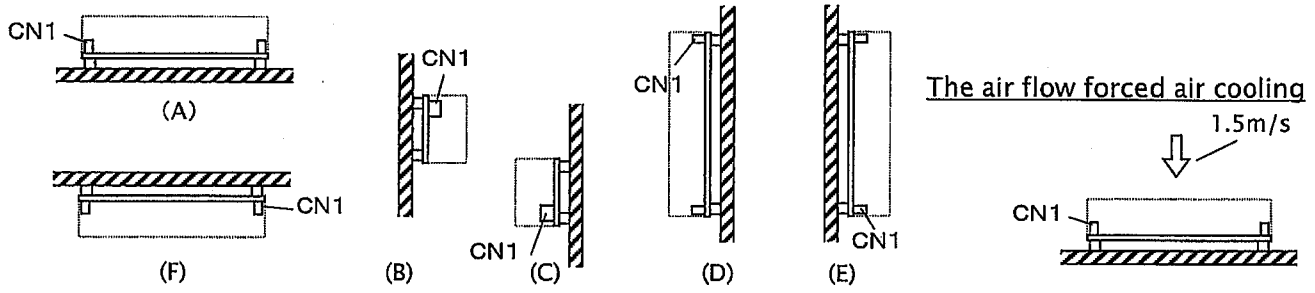

Output derating

For Open frame

mUZP-120-12-J0L, 12-JB0

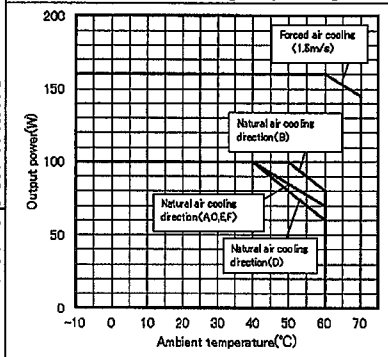

mUZP-120-24-J0L, 24-JB0

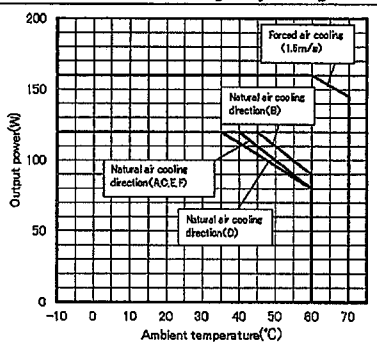

mUZP-120-12-JBH, 24-JBH

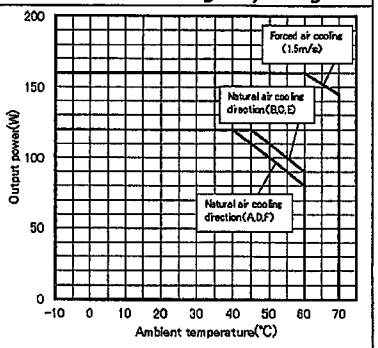

With chassis and cover

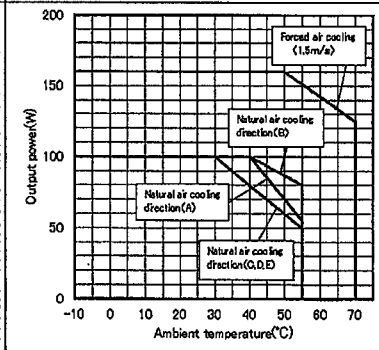

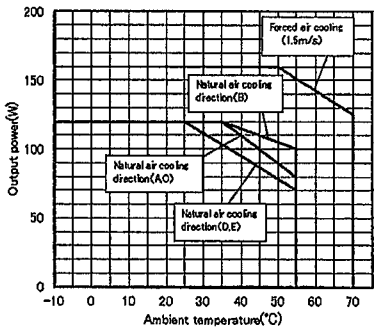

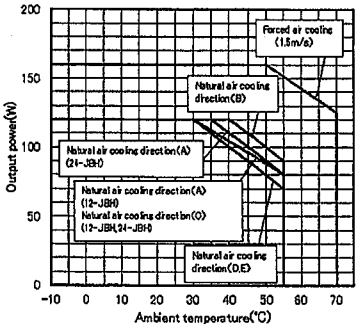

△×2:2020.04.10 M.Okudaira I-320414

Drawn by	Yodo	Checked by	Yamada	Approved by	Yamamoto	Model: mUZP-120-**-J***-*	Drawing No. 3511-01-4-520 A 7/11

●Output Derating vs. Input Voltage

When input voltage is 90VAC or lower, follow the derating diagram below to reduce the continuous rated current and power.

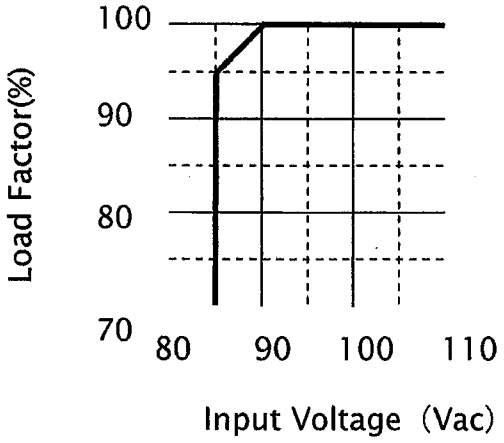

Note:

Drawn by	Yodo	Checked by	Yamada	Approved by	Yamamoto	Model: mUZP-120-**-J***-*	Drawing No. 3511-01-4-520 8/11

●Circuit Block Diagram

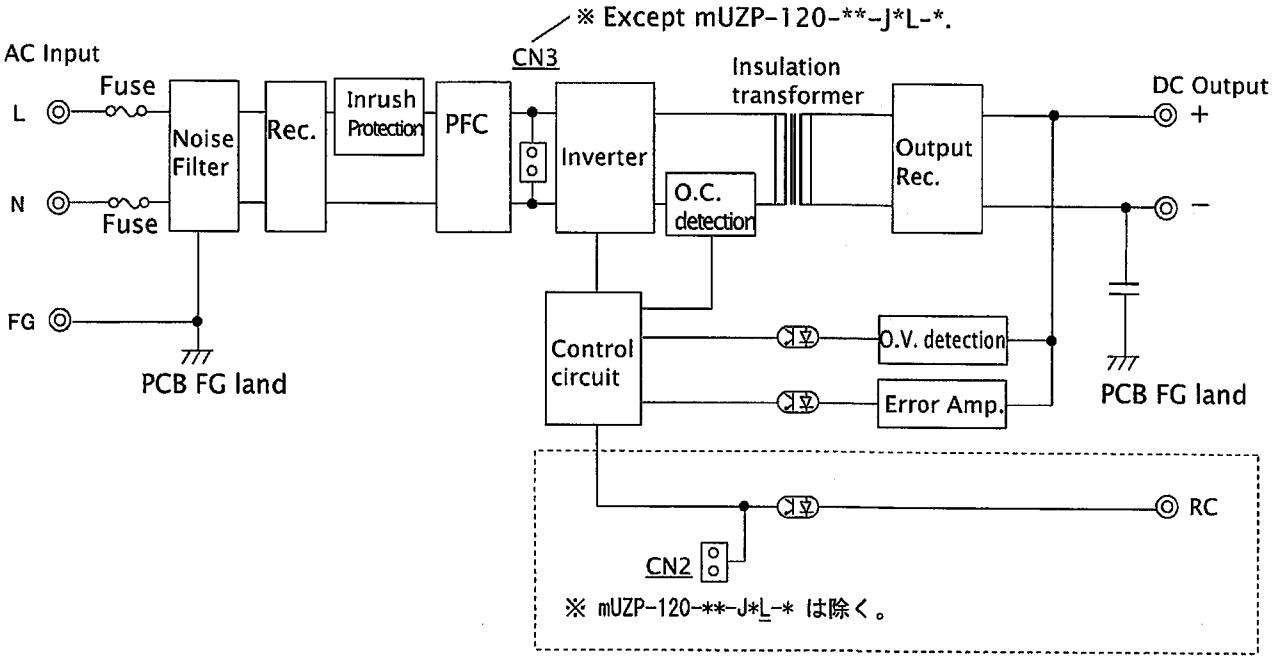

Note:

Drawn by	Yodo	Checked by	Yamada	Approved by	Yamamoto	Model: mUZP-120-**-J***-*	Drawing No. 3511-01-4-520 9/11

●Power Supply Installation

- To meet standard of insulation and dielectric withstanding, install the power supply to keep the dimensions, d1,d2 and d3, shown in the drawing below.
- Install the power supply so that natural air convection and air ventilation are expected to keep the temperature rise around the power supply low.

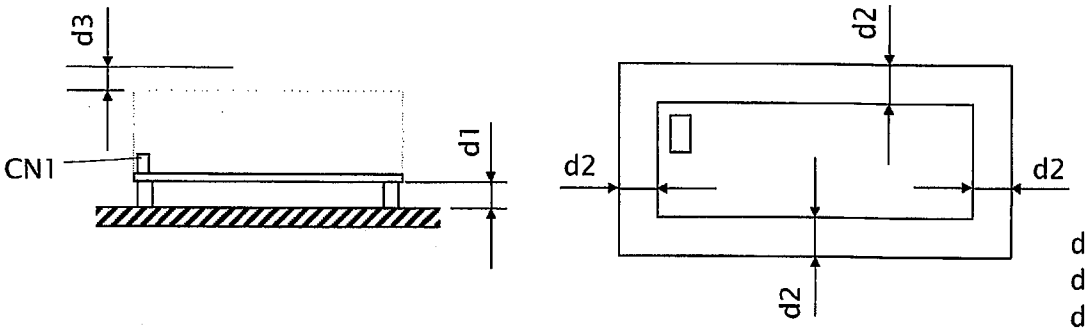

d1=8mm min
d2=4mm min
d3=5mm min

●Mounting Screws and Grounding of Power Supply

- Fix 4 screws firmly at power supply mounting holes.
- Use 3mm diameter screws for mounting power supply.
- Do not use the metal mounting parts that exceed the hatched area shown below.
- In mounting the unit with chassis and cover, do not use any screws that exceed the dimension shown below.
- Make sure to connect FG terminal of CN1 or FG portion of PCB to customer's safety grounding. Also, make sure to connect FG terminal of CN1 to the safety ground of the customer's system in the case of safety standard application.
- Be recommended to connect the FG portion of solder face of PCB to customer's metal system body with metal parts such as metal spacers to reduce noise.

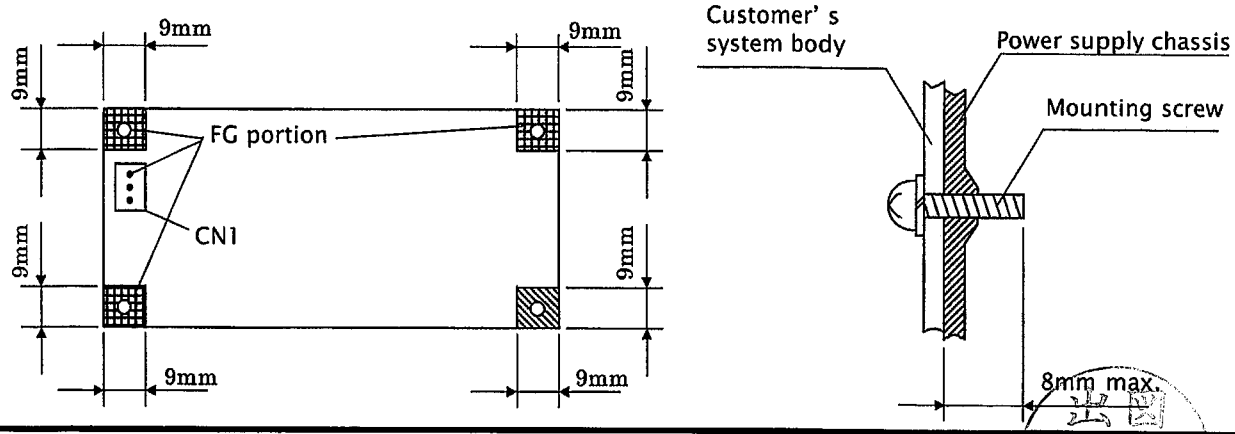

Note:

Drawn by	Yodo	Checked by	Yamada	Approved by	Yamamoto	Model: mUZP-120-**-J***-*	Drawing No. 3511-01-4-520 10/11

Precautions before use

1. Grounding ⚠ Warning
   This unit is designed and produced to meet Class I equipment. Make sure to connect the grounding terminal of the unit to grounding in a proper way for safety.

2. Electric shock ⚠ Warning
   This unit is designed and produced as built-in equipment and high-voltage part inside. Make sure to securely install in the equipment in a proper way to prevent electric shock. Also, shorting plug (CN2) for RC signal setting is primary circuit components. When the plug is handled, make sure to turn off AC input before the handling of the plug.

3. PCB handling ⚠ Caution
   In handling, use the edge of the PCB so as not to touch the component sides. Lift the PCB from the equipment with filter pieces in installation. Besides, handle the PCB with care to prevent twisting or bending of the PCB board as it has SMT components on it.

4. Output short circuit ⚠ Caution
   Prevent shorting outputs. When output is shorted, capacitors inside the power supply rapidly discharge leading to fire and/or spark resulting in serious accident. It also shortens the lifetime of the power supply.

5. Inrush current control circuit ⚠ Caution
   To prevent inrush current into rectifying capacitors when AC input is turned on, a power thermistor is used. When AC input is turned on before the temperature of the thermistor goes low after turning off, huge inrush current may occur. Make sure to keep 60-second period at least before reclosing of AC input.

6. Output energy ⚠ Caution
   The output energy of this unit is 240VA or more, and regarded dangerous. Any operators must not touch the unit. Besides, apply necessary measures to prevent service personnel or service tools to touch accidentally the equipment with this unit installed. Make sure that the output voltage of this unit goes down to the safe level before servicing after the input voltage is turned off.

出図
'20.10.19
㈱ニプロン
技術管理

Drawn by	Yodo	Checked by	Yamada	Approved by	Yamamoto	Model: mUZP-120-**-J***-*	Drawing No. 3511-01-4-520 11/11

Nipron

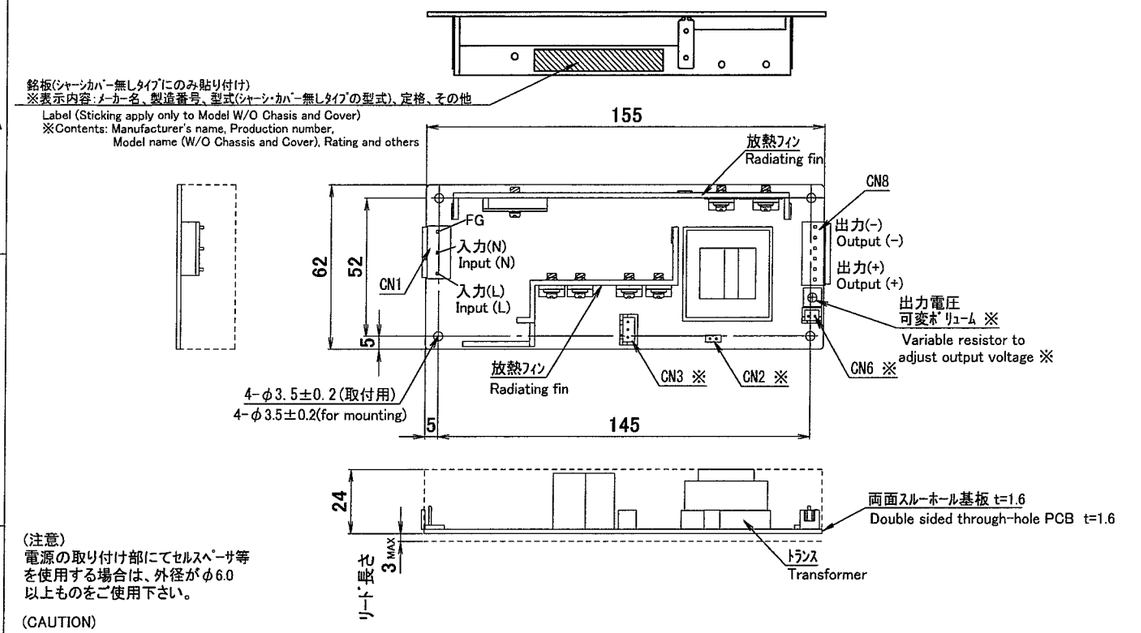

(注意)
電源の取り付け部にてセルスペーサ等を使用する場合は、外径がφ6.0以上ものをご使用下さい。

(CAUTION)
If a spacer is used at mounting space, the outside diameter should be φ6.0 or more.

シャーシ・カバー無タイプ (型式:UZP-120-12-J＊＊＊)
(型式:UZP-120-24-J＊＊＊)
(型式:mUZP-120-24-J＊＊＊)
(型式:mUZP-120-24-J＊＊＊)
W/O Chassis and Cover model (Model name: UZP-120-12-J＊＊＊)
(Model name: UZP-120-24-J＊＊＊)
(Model name: mUZP-120-24-J＊＊＊)
(Model name: mUZP-120-24-J＊＊＊)

※ J0Lタイプには実装されておりません
It does not mounting component the J0L type

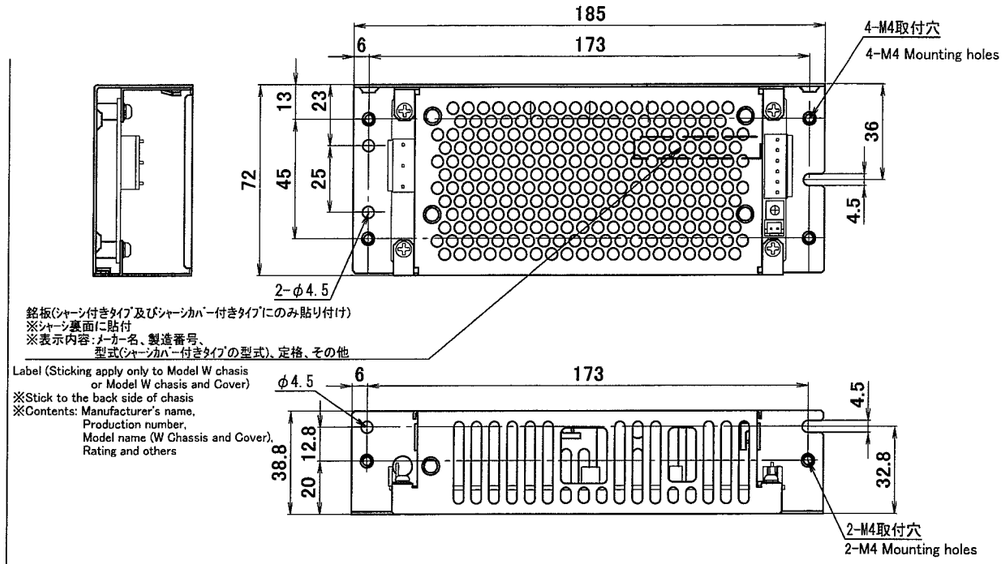

シャーシ・カバー付きタイプ (型式:UZP-120-12-J＊＊＊-K)
(型式:UZP-120-24-J＊＊＊-K)
(型式:mUZP-120-24-J＊＊＊-K)
(型式:mUZP-120-24-J＊＊＊-K)
Model name with Chassis and Cover (Model name: UZP-120-12-J＊＊＊-K)
(Model name: UZP-120-24-J＊＊＊-K)
(Model name: mUZP-120-24-J＊＊＊-K)
(Model name: mUZP-120-24-J＊＊＊-K)

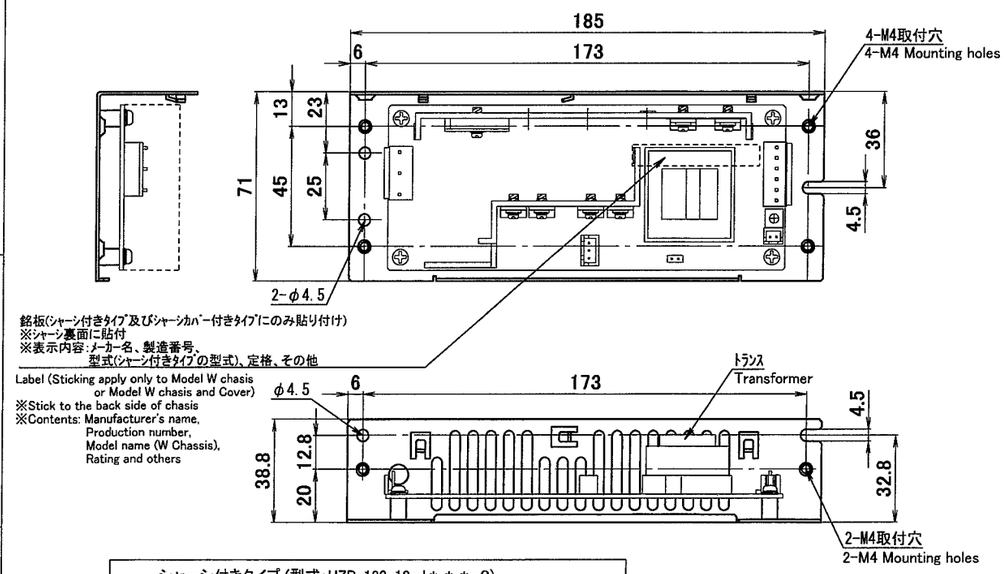

シャーシ付きタイプ (型式:UZP-120-12-J＊＊＊-C)
(型式:UZP-120-24-J＊＊＊-C)
(型式:mUZP-120-24-J＊＊＊-C)
(型式:mUZP-120-24-J＊＊＊-C)
Model name with Chassis (Model name: UZP-120-12-J＊＊＊-C)
(Model name: UZP-120-24-J＊＊＊-C)
(Model name: mUZP-120-24-J＊＊＊-C)
(Model name: mUZP-120-24-J＊＊＊-C)

※コネクタピンアサイン

J0Lタイプには実装されておりません。
It does not mounting component the J0L type

CN1 (Input)

PIN No.	FUNCTION	CONNECTOR TYPE
1	AC(L)	B3P5-VH (JST)
2		
3	AC(N)	
4		
5	FG	

※CN1 適合ハウジング:
VHR-5N(JST)
適合ターミナル:
リール:SVH-21T-P1.1(JST)
バルク:BVH-21T-P1.1(JST)

※CN1 Applicable housing:
VHR-5N(JST)
Applicable terminals:
Reel: SVH-21T-P1.1(JST)
Bulk: BVH-21T-P1.1(JST)

CN8 (Output)

PIN No.	FUNCTION	CONNECTOR TYPE
1~3	-DC	B6P-VH (JST)
4~6	+DC	

※CN8 適合ハウジング:
VHR-6N(JST)
適合ターミナル:
リール:SVH-21T-P1.1(JST)
バルク:BVH-21T-P1.1(JST)

※CN8 Applicable housing:
VHR-6N(JST)
Applicable terminals:
Reel: SVH-21T-P1.1(JST)
Bulk: BVH-21T-P1.1(JST)

CN3 (Capacitor package Input/Output)

PIN No.	FUNCTION	CONNECTOR TYPE
1	380V(Pri)	B3B-XH-A(JST)
2		
3	0V(Pri)	

※CN3 適合ハウジング:
XHP-3(JST)
適合ターミナル:
リール:SXH-001T-P0.6(JST)
バルク:BXH-001T-P0.6(JST)

※CN3 Applicable housing:
XHP-3(JST)
Applicable terminals:
Reel: SXH-001T-P0.6(JST)
Bulk: BXH-001T-P0.6(JST)

CN6 (ON/OFF Control)

PIN No.	FUNCTION	CONNECTOR TYPE
1	+RC	B2B-XH-A (JST)
2	-RC	

※CN6 適合ハウジング:
XHP-2(JST)
適合ターミナル:
リール:SXH-001T-P0.6(JST)
バルク:BXH-001T-P0.6(JST)

※CN6 Applicable housing:
XHP-2(JST)
Applicable terminals:
Reel: SXH-001T-P0.6(JST)
Bulk: BXH-001T-P0.6(JST)

出図
'16.2.03
㈱ニプロン
技術管理

注1:指示なき寸法公差は ±1mm とする。(但し取付寸法は±0.5とする。)

注2:シャーシの取付穴(M4)締め付けトルク:1.5N·m MAX

Note 1: Design tolerance of dimensions is ±1mm .(±0.5 for mounting dimension.)

Note 2: Tightening torque for chassis mounting hole (M4) : 1.5N·m MAX

DRAWN BY	CHECKED BY	CHECKED BY	APPROVED BY	SCALE		MATERIALS	TITLE	UZP-120・mUZP-120
坂本(和)	石橋	山西	山本	UNITS	m/m	FINISH		外観図
ISSUED	2016.01.13			3RD ANGLE PROJECTION			DRAWING NO.	3431-01-3-050

株式会社 ニプロン

Due to the technical improvement, the specifications and functions are subject to change without notice.